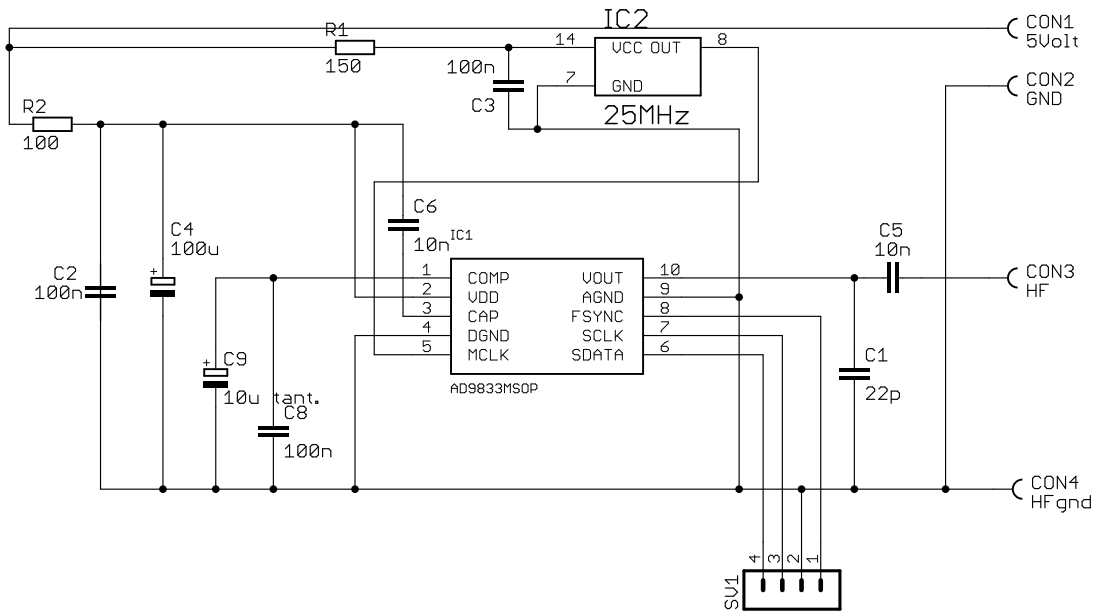

TITLE: oszineu

Document Number:

REV:

Date: 1/19/2005 20:14:25

Sheet: 1/1