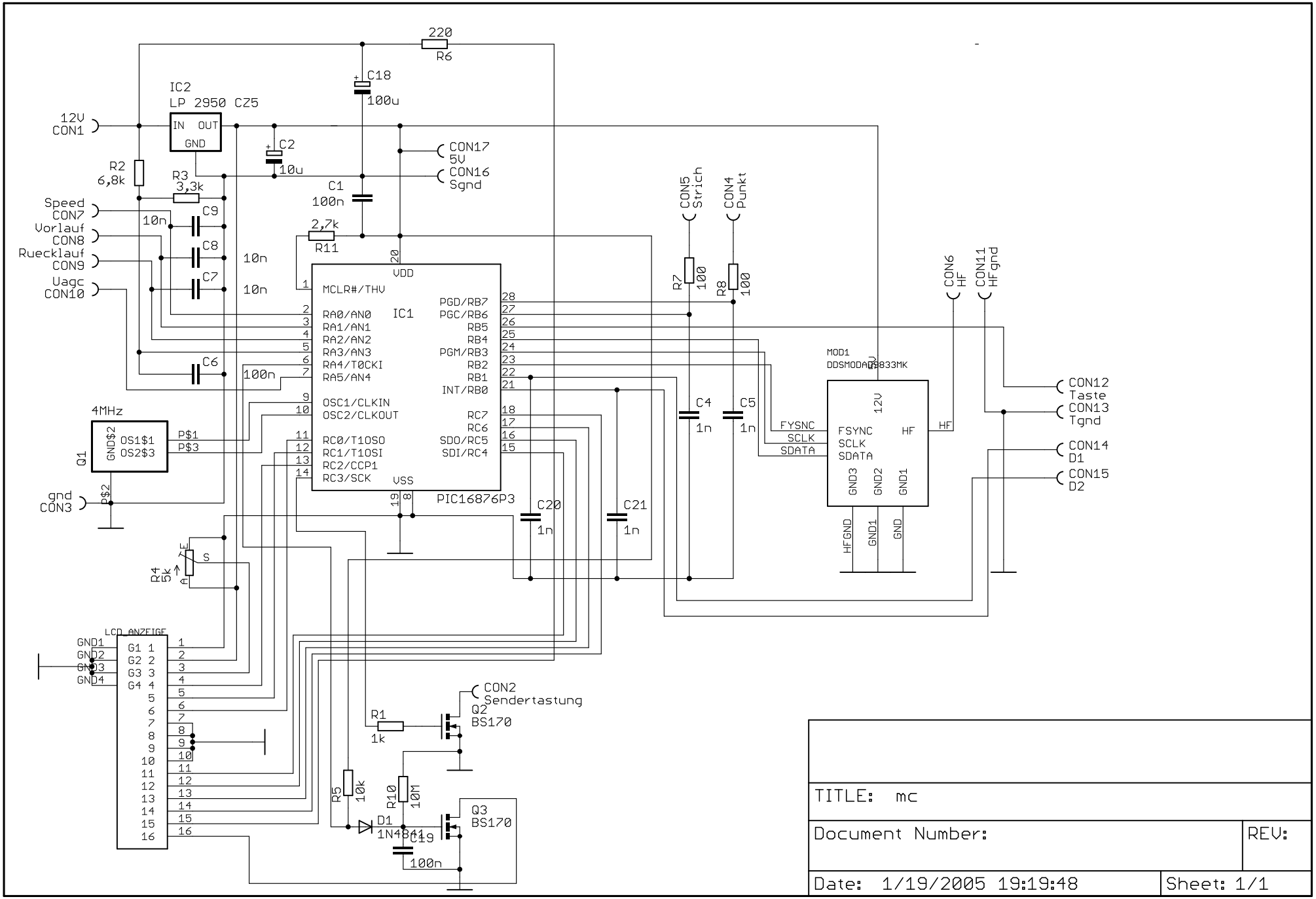

TITLE: mc

Document Number:

REV:

Date: 1/19/2005 19:19:48

Sheet: 1/1